THIS COPY IS PROVIDED ON A RESTRICTED BASIS AND IS NOT TO BE USED IN ANY WAY DETRIMENTAL TO THE INTERESTS OF PANDUIT CORP.

PANDUIT PART NUMBER	STUD SIZE	DIMENSIONS in.				
		A ±.03	W ±.01	C ±.02	M ±.03	H ±.01
P2-10RHT6-X	#10	1.46 (37.08)	.68 (17.27)	.58 (14.73)	1.12 (28.45)	.20 (5.08)
P2-14RHT6-X	1/4"	1.46 (37.08)	.68 (17.27)	.58 (14.73)	1.12 (28.45)	.27 (6.86)
P2-56RHT6-X	5/16"	1.46 (37.08)	.68 (17.27)	.58 (14.73)	1.12 (28.45)	.33 (8.38)
P2-38RHT6-X	3/8"	1.46 (37.08)	.68 (17.27)	.58 (14.73)	1.12 (28.45)	.39 (9.91)
P2-12RHT6-X	1/2"	1.55 (39.37)	.86 (21.84)	.58 (14.73)	1.12 (28.45)	.52 (13.21)

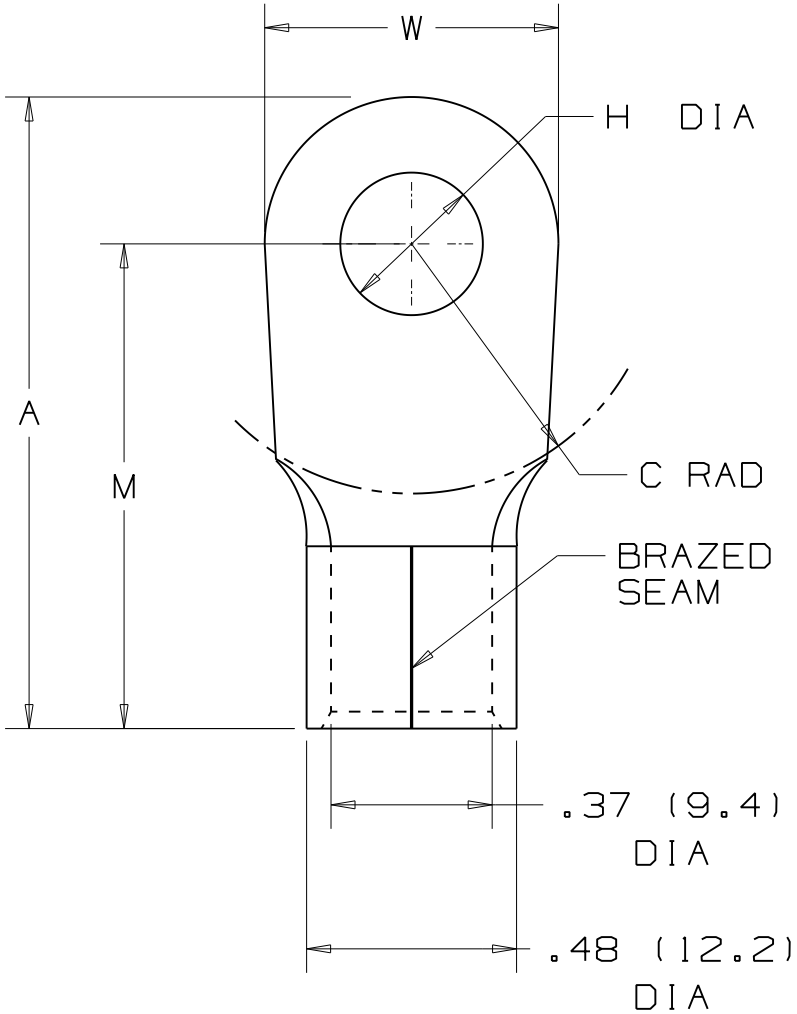

NOTES:

1. FOR #2 AWG STRANDED COPPER WIRE
2. 650° F (343° C) MAX OPERATING TEMP
3. PACKAGE QTY: STD. PKG. -X=10
4. MATERIAL: .060" (1.52) THK COPPER, NICKEL PLATED
5. DIMENSIONS IN BRACKETS ARE IN MILLIMETERS
6. INSTALLATION TOOL: CT-2600
7. WIRE STRIP LENGTH: 7/16 $^{+1/32}_{-0}$ (11.11 $^{+.8}_{-0}$)

REV	DATE	BY	CHK	DESCRIPTION	ECN #	CUST	PM
02	5/09	BCT		REMOVED BULK PACKAGING QUANTITIES			
01	2/09	BCT		MODIFIED PACKAGING TO -X PACKS			
00	6/08	BCT		RELEASED			

PANDUIT CORP. TINLEY PARK, ILLINOIS

#2 BARREL NON-INSULATED HIGH TEMPERATURE RING TONGUE

DRAWN BY	CHK'D	SCALE	DRAWING NO.
BCT		NONE	A41744